ALTRA INDUSTRIAL MOTION

Dura-Flex®
Elastomeric Couplings (Metric)

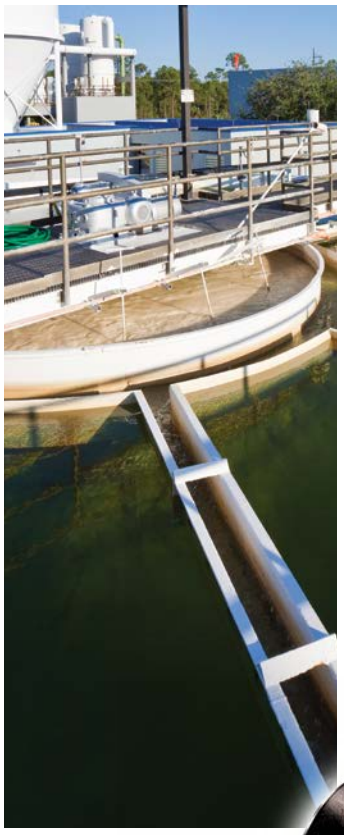

TB Wood's®
Altra Industrial Motion

Dura-Flex couplings are designed from the ground up using finite element analysis to maximize flex life

TB Wood's Dura-Flex couplings "split-in-half" element design allows for easy element installation/replacement without moving connected equipment or disturbing the shaft connection.

Spacer design can accommodate a large range of shaft spacing with few parts. Patented design of the urethane bond to the leading edge of the steel shoe bolted to the hub, minimizes bond stress for long coupling life.

These couplings are highly flexible and able to accommodate shaft misalignments (1/16" parallel misalignment and 4° angular misalignment) while minimizing torsional vibration and preventing damage to connected equipment.

Specially formulated polyurethane material provides superior weathering, chemical resistance, and dynamic properties.

Patent No. 5,611,732

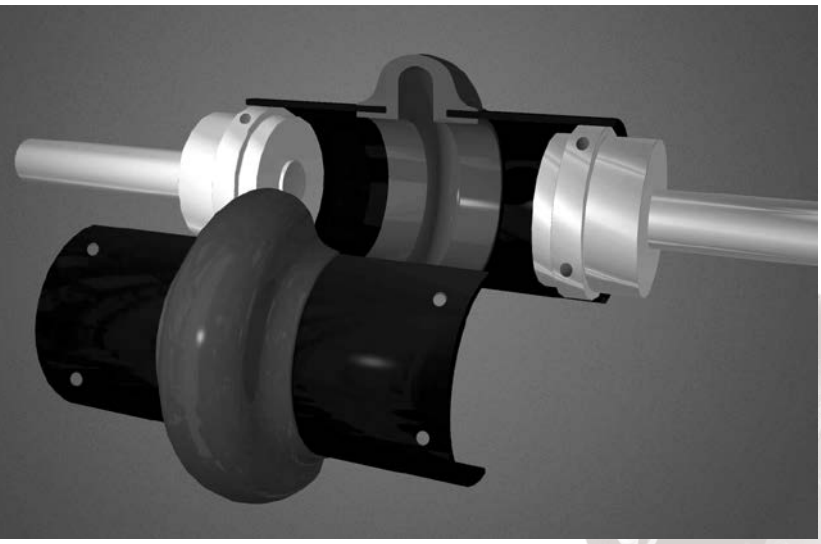

Specially designed, split-in-half element can be easily replaced without moving any connected equipment.

Features (Metric)

- Torque up to 4.50 kNm; 39,500 in.lbs.
- Easy to assemble/replace
- High misalignment ratings
- No maintenance/lubrication
- Part-for-part interchangeable with industry standard design
- In-stock versatile spacer design can accommodate many configurations with few parts
- Bore-to-size (BTS), Sure-Grip bushed (QD), and Taper-Lock® hubs are available
- All dimensions including hardware and fasteners

Applications

Dura-Flex couplings can be found hard at work in many industries such as water treatment, paper and metal processing, power generation, and material handling. These couplings are ideal for a wide variety of applications with uniform to heavy shock loads including:

- Pumps
- Fans/Blowers
- Compressors
- Electric Motors
- Conveyors

Dura-Flex couplings withstand harsh conditions in wastewater facilities.

Determining Prime Mover Classification

Prime Mover	Class
Electric Motors (standard duty), Hydraulic Motors, Turbines	A
Gasoline or Steam Engines (4 or more cylinders)	B
Diesel or Gas Engines, High Torque Electric Motors	C

Determining Load Characteristics and Service Factor

Typical Applications	Load	Characteristics	Prime Mover Class		
			A	B	C
Agitators (pure liquids), Blowers (centrifugal, Can and Bottle Filling Machines, Conveyors – uniformly loaded or fed (belt, chain, screw), Fans (centrifugal), Generators (uniform load), Pumps (centrifugal), Screens (air washing, water), Stokers (uniform load), Woodworking Machines (planers, routers, saws)	Uniform	Even loads – no shock – non reversing – infrequent starts (up to 10 per hour) – low starting torques	1.0	1.5	2.0
Beaters, Blowers (lobe, vane), Compressors (centrifugal, rotary), Conveyors – non uniformly loaded or fed (belt, bucket, chain, screw), Dredge Pumps, Fans (forced draft, propeller), Kilns, Paper Mills (calendars, converting machines, conveyors, dryers, mixers, winders), Printing Presses, Pumps (gear, rotary), Shredders, Textile Machinery (dryers, dyers)	Moderate shock	Uneven loads – moderate shock infrequent reversing-moderate torques	1.5	2.0	2.5
Cranes (bridge, hoist, trolley), Fans (cooling tower), Generators (welding), Hammer Mills, Mills (ball, pebble, rolling, tube, tumbling), Pumps (oil well), Wire Drawing Machines	Heavy shock	Uneven loads – heavy shock – frequent starts and stops – high starting torques – high inertia peak loads	2.0	2.5	3.0

Note: The above applications depict the generally accepted conditions encountered in industry. Conditions subject to extreme temperatures, abrasive dusts, corrosive liquids, excessively high starting torques, etc., must be considered as extra heavy shock loads. These conditions will increase service factors. Consult TB Wood's for these selections.

Calculate Design Horsepower or Design Torque

- If Prime Mover is a 970, 1450, or 3000 RPM motor
  Design KW = Prime Mover KW x Service Factor
  Go to page 4 and reference the corresponding motor RPM column.
- If Prime Mover is not one of the three speeds listed above
  Design KW @ 100 RPM = (Primer Mover KW x Service Factor x 100) / Coupling RPM
  Go to page 4 and reference KW @ 100 RPM column.
- If Using Prime Mover Torque
  Design Torque = Prime Mover Torque x Service Factor
  Go to page 4 and reference Torque column.

Metric Version Catalog

For Imperial information
see Catalog P-1690-TBW

Coupling Selection

Dura-Flex Couplings sold by component

A DURA-FLEX Assembly consists of one element (STD or Spacer) and two hubs (BTS or QD). Optional high speed rings may also be ordered for spacer elements. Below is an ordering example for Dura-Flex Couplings.

	Part #	Description	Size 20 Example
Element (1)	WE2M – WE80M	Standard Metric Element, sizes 2 through 80	WE20M
	WES2M – WES80M	Spacer Metric Element, sizes 2 through 80	WES20M
Hubs (2)	WE[2-80] HMPB	BTS Hubs – MPB suitable to rebore	WE20HMMPB
	WE[3-80] HMTL Bushing	TL Hubs (sizes 3 through 80, bushing not included)	WE20HMTL
*HS Rings (1)	WE[20-80]RM	High speed rings - size 20-80 (standard for sizes 2-10)	WE20RM

*Spacer element only

Coupling Ratings (standard & spacer) (Metric)

Coupling Size	KW @ RPM				Torque Nm	Stiffness NM/RAD	Maximum RPM		Max. Misalignment	
	100	970	1450	3000			Standard	Spacer•	Parallel (mm)	Angular
WE2M	0.22	2.17	3.24	6.71	22	358	7500	7500	1.6	4°
WE3M	0.43	4.20	6.27	12.98	41	532	7500	7500	1.6	4°
WE4M	.66	6.37	9.52	19.69	62	607	7500	7500	1.6	4°
WE5M	1.10	10.71	16.00	33.11	105	1110	7500	7500	1.6	4°
WE10M	1.72	16.64	24.87	51.45	164	1790	7500	7500	1.6	4°
WE20M	2.72	26.40	39.47	81.65	260	3120	6600	4800	2.4	3°
WE30M	4.32	41.88	62.61	129.53	412	4770	5800	4200	2.4	3°
WE40M	6.60	64.01	95.69	197.98	622	7370	5000	3600	2.4	3°
WE50M	9.05	87.81	131.27	271.58	864	13900	4200	3100	2.4	3°
WE60M	14.79	143.51	214.52	443.84	1412	18900	3800	2800	3.2	2°
WE70M	26.19	254.03	379.74	785.67	2500	23200	3600	2600	3.2	2°
WE80M	46.76	453.53	677.95	1402.66	4463	34500	2000	1800	3.2	2º

* Maximum spacer RPM = Maximum standard RPM if using optional high speed rings

Assembly Dimensions

All dimensions in mm

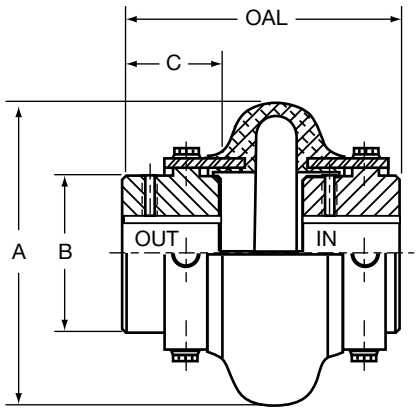

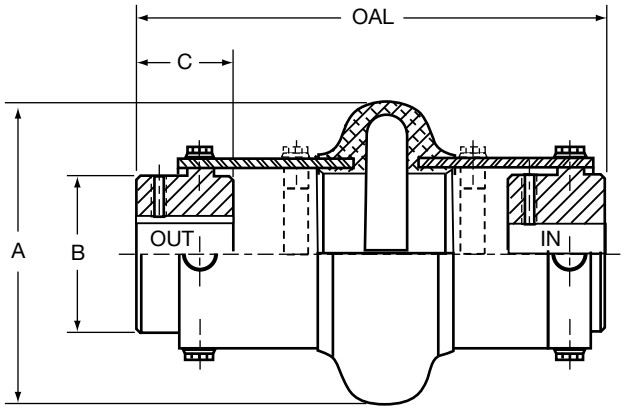

Sizes WES2M through WES10M are furnished with high speed rings. All larger sizes, rings can be ordered as an option.

All weights shown are with MPB style hubs.

Shaft Spacing from 6.35 mm up to the MAX DBSE can be accommodated by positioning hubs IN or OUT or by using various existing hole patterns. OAL — Over All Length does Not include bolt heads.

Dimensions Common to BTS Standard and Spacer Assemblies (mm)

Size	A	B	C	Max Bore
WE2M & WES2M	94	47	24	29
WE3M & WES3M	108	59	38	35
WE4M & WES4M	115	66	43	42
WE5M & WES5M	137	80	44	48
WE10M & WES10M	165	93	48	54
WE20M & WES20M	187	114	52	60
WE30M & WES30M	214	138	59	73
WE40M & WES40M	247	168	64	86
WE50M & WES50M	288	207	70	92
WE60M & WES60M	318	222	83	102
WE70M & WES70M	356	235	92	114
WE80M & WES80M	406	287	124	152

Standard Element Assembly (mm)

Product No.	OAL MAX	OAL MIN	Maximum DBSE	Weight Kg
WE2M	96	82	48	0.68
WE3M	110	97	34	1.5
WE4M	119	97	33	2.0
WE5M	135	110	46	3.4
WE10M	141	105	46	5.1
WE20M	173	109	69	7.4
WE30M	193	118	76	12.6
WE40M	207	129	80	20.6
WE50M	234	147	94	26.8
WE60M	272	164	107	37.5
WE70M	279	183	123	49.4
WE80M	375	236	169	110.5

Product number is element only.

Spacer Element Assembly (mm)

Product No.	OAL MAX	OAL MIN	Maximum DBSE	Weight Kg
WES2M	145	145	103	1.1
WES3M	204	185	128	2.2
WES4M	213	185	127	2.8
WES5M	216	185	127	4.3
WES10M	223	185	127	6.2
WES20M	284	237	180	8.7
WES30M	296	237	180	14.1
WES40M	302	237	175	22.2
WES50M	313	237	173	28.8
WES60M	414	315	248	41.3
WES70M	427	318	243	58.1
WES80M	501	318	248	117.0

Product number is element only.

Taper Lock® Bushed Coupling

Assembly Dimensions

All dimensions in mm

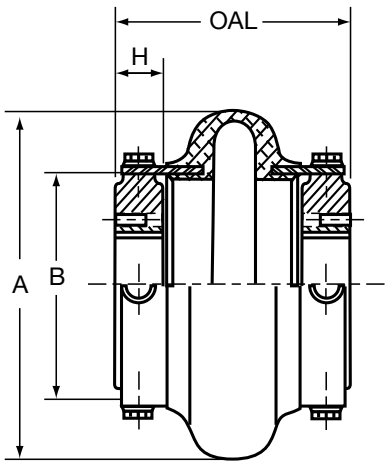

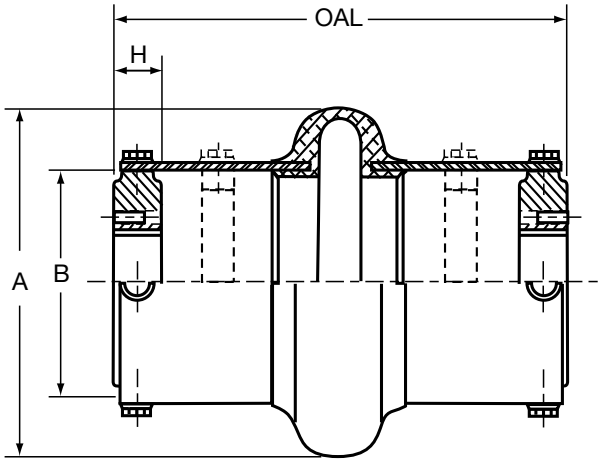

Dimensions Common to Taper-Lock® Bushed Standard and Spacer Assemblies (mm)

Size	A	B	H	Bushing	Max Bore
WE3M & WES3M	108	59	22	TL1008	26
WE4M & WES4M	115	66	22	TL1008	26
WE5M & WES5M	137	80	22	TL1210	32
WE10M & WES10M	165	93	25	TL1610	44
WE20M & WES20M	187	114	25	TL1610	44
WE30M & WES30M	214	138	32	TL2012	55
WE40M & WES40M	247	168	44	TL2517	68
WE50M & WES50M	288	207	44	TL2517	68
WE60M & WES60M	318	222	51	TL3020	82
WE70M & WES70M	356	235	89	TL3535	100
WE80M & WES80M	406	287	102	TL4040	113

Standard Element Assembly (mm)

Product No.	OAL	Maximum DBSE	Weight kg
WE3M	87	43	0.8
WE4M	87	43	1.2
WE5M	100	56	1.8
WE10M	103	52	2.7
WE20M	114	64	4.1
WE30M	129	65	6.2
WE40M	149	60	9.9
WE50M	165	76	14.3
WE60M	186	84	21.1
WE70M	238	60	30.3
WE80M	298	95	37.2

Product number is element only.

Sizes WES3M through WES10M are furnished with high speed rings. All larger sizes, rings can be ordered as an option.

All weights shown are with MPB bushings.

Spacer Element Assembly (mm)

Product No.	OAL MAX	OAL MIN	Maximum DBSE	Weight Kg
WES3M	185	185	137	1.5
WES4M	185	185	137	1.9
WES5M	185	185	137	2.7
WES10M	185	185	133	3.6
WES20M	237	237	174	5.4
WES30M	237	237	168	8.2
WES40M	244	237	155	12.2
WES50M	244	237	155	17.0
WES60M	328	315	226	27.5
WES70M	364	318	186	36.9
WES80M	377	318	174	42.3

Product number is element only.

Shaft Spacing from 6.35 mm up to the MAX DBSE can be accommodated by positioning hubs IN or OUT or by using various existing hole patterns. OAL — Over All Length does Not include bolt heads.

® Taper-Lock: J.H. Fenner & Co. Limited, England.

TB Wood's offers a wide range of couplings for industrial applications

For over 70 years, TB Wood's has been designing and manufacturing innovative coupling solutions to meet therequirements for a broad variety of applications spanning many industries. TB Wood's couplings represent the latest in technology, featuring superior design and exceptional quality to ensure long-lasting performance in all types of industrial applications including printing presses, machine tools, cooling tower fans, food processing equipment, pumps, blowers, electric motors, compressors, mixers, and conveyors.

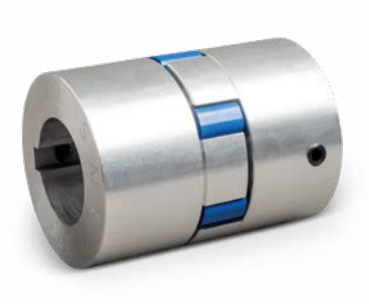

L-JAW

ELASTOMERIC COUPLINGS

Jaw-type elastomeric couplings are an economical, proven solution for general purpose applications. Jaw couplings are easy to install and require no lubrication or maintenance. Four different flexible insert types are available: Buna-N rubber, Urethane, Hytrel™ and Bronze. Jaw couplings are an excellent choice for all light and medium duty general purpose industrial applications. Models available with torque capacities up to 0.70 kNm; 6,228 in.lbs.

See Catalog P-1686-TBW

SURE-FLEX PLUS®

ELASTOMERIC COUPLINGS

Sure-Flex Plus is a TB Wood's original! Sure-Flex Plus Couplings utilize a rubber (EPDM or Neoprene) or Hytrel™ thermoplastic flex element (sleeve) to transmit torque and accommodate shaft misalignments. Sure-Flex Plus couplings have exceptional torsional flexibility, and the 4-way flexing action absorbs virtually all types of shock, vibration, misalignment, and end float. These couplings are an excellent choice when low cost, high flexibility, vibration damping, and easy installation are primary concerns. Models available with torque capacities up to 8.20 kNm; 72,480 in.lbs.

See Catalog P-1686-TBW

G-FLEX

GRID COUPLINGS

State-of-the-art design from Bibby Turboflex, the original grid coupling manufacturer. G-Flex is an all-metal coupling that provides positive protection against the damaging effects of shock loads and vibration. Aluminum horizontal cover (T10), and all-steel vertical cover (T20) designs are available. G-Flex tapered grid couplings are an excellent choice where torsional flexibility and vibration damping are primary concerns. Models available with torque capacities up to 169 kNm; 1,500,000 in.lbs.

See Catalog P-1686-TBW

FORM-FLEX

DISC COUPLINGS

Form-Flex metal disc couplings consist of two hubs, a spacer and two high strength carbon or stainless steel flexible discs. Modified and special designs are commonly supplied to meet specific application conditions. Available in carbon steel, stainless steel or with corrosion resistant coatings. Models available with torque capacities up to 270 kNm; 2,400,000 in.lbs.

See Catalog P-1686-TBW

TB Wood's Facilities

North America

USA

440 North Fifth Avenue
Chambersburg, PA 17201 - USA
888-829-6637 * 717-264-7161

Belted Drives and Elastomeric Couplings

Customer Service
1-888-829-6637 (Press #5)

For Application Support
1-888-829-6637 (Press #7)

2000 Clovis Barker Road
San Marcos, TX 78666 - USA
1-888-449-9439

General Purpose Disc Couplings

Customer Service
1-888-449-9439

4970 Joule St
Reno, NV 89502 - USA
775-857-1800

Canada

9779 45 Ave NW
Edmonton, AB T6E 5V8 - Canada
+1 780-439-7979

6305 Danville Road
Mississauga, ON L5T 2H7 - Canada
1-800-829-6631

1073 Rue Bégin
Saint-Laurent, QC H4R 1V8 - Canada
+1 514-332-4812

Mexico

Comisión Federal de Electricidad 850,
Industrial San Luis,
San Luis, S.L.P., 78395 - Mexico
+52 444 137 1500

Europe

Merchant Drive, Hertford
Hertfordshire SG13 7BL - England
+44(0)1992 501900

Elastomeric Couplings

The Brands of Altra Industrial Motion

Couplings

Ameridrives
www.ameridrives.com

Bibby Turboflex
www.bibbyturboflex.com

Guardian Couplings
www.guardiancouplings.com

Huco
www.huco.com

Lamiflex Couplings
www.lamiflexcouplings.com

Stromag
www.stromag.com

TB Wood's
www.tbwoods.com

Geared Cam Limit Switches

Stromag
www.stromag.com

Electric Clutches & Brakes

Inertia Dynamics
www.idicb.com

Matrix
www.matrix-international.com

Stromag
www.stromag.com

Warner Electric
www.warnerelectric.com

Linear Products

Warner Linear
www.warnerlinear.com

Engineered Bearing Assemblies

Kilian
www.kilianbearings.com

Heavy Duty Clutches & Brakes

Industrial Clutch
www.indclutch.com

Twiflex
www.twiflex.com

Stromag
www.stromag.com

Svendborg Brakes
www.svendborg-brakes.com

Wichita Clutch
www.wichitaclutch.com

Belted Drives

TB Wood's
www.tbwoods.com

Gearing

Bauer Gear Motor
www.bauergears.com

Boston Gear
www.bostongear.com

Delroyd Worm Gear
www.delroyd.com

Nuttall Gear
www.nuttallgear.com

Overrunning Clutches

Formsprag Clutch
www.formsprag.com

Marland Clutch
www.marland.com

Stieber
www.stieberclutch.com

Neither the accuracy nor completeness of the information contained in this publication is guaranteed by the company and may be subject to change in its sole discretion. The operating and performance characteristics of these products may vary depending on the application, installation, operating conditions and environmental factors. The company's terms and conditions of sale can be viewed at http://www.altramotion.com/terms-and-conditions/sales-terms-and-conditions. These terms and conditions apply to any person who may buy, acquire or use a product referred to herein, including any person who buys from a licensed distributor of these branded products.

©2018 by TB Wood's LLC. All rights reserved. All trademarks in this publication are the sole and exclusive property of TB Wood's LLC or one of its affiliated companies.

TB Wood's®
Altra Industrial Motion

www.tbwoods.com

P-1956-TBW-A4 5/18